MobileMustHave
MOBILE LIFESTYLE SOLUTIONS

ADVANCED CONFIGURATION QUESTIONS?
JOIN OUR MEMBERSHIP TO FURTHER THE CONVERSATION
http://membership.mobilemusthave.com

Transit Pro E / Ultimate Road Warrior LE

Sample Power Wiring Diagram using optional DC Fuse Block + 56v DC Converted for PoE

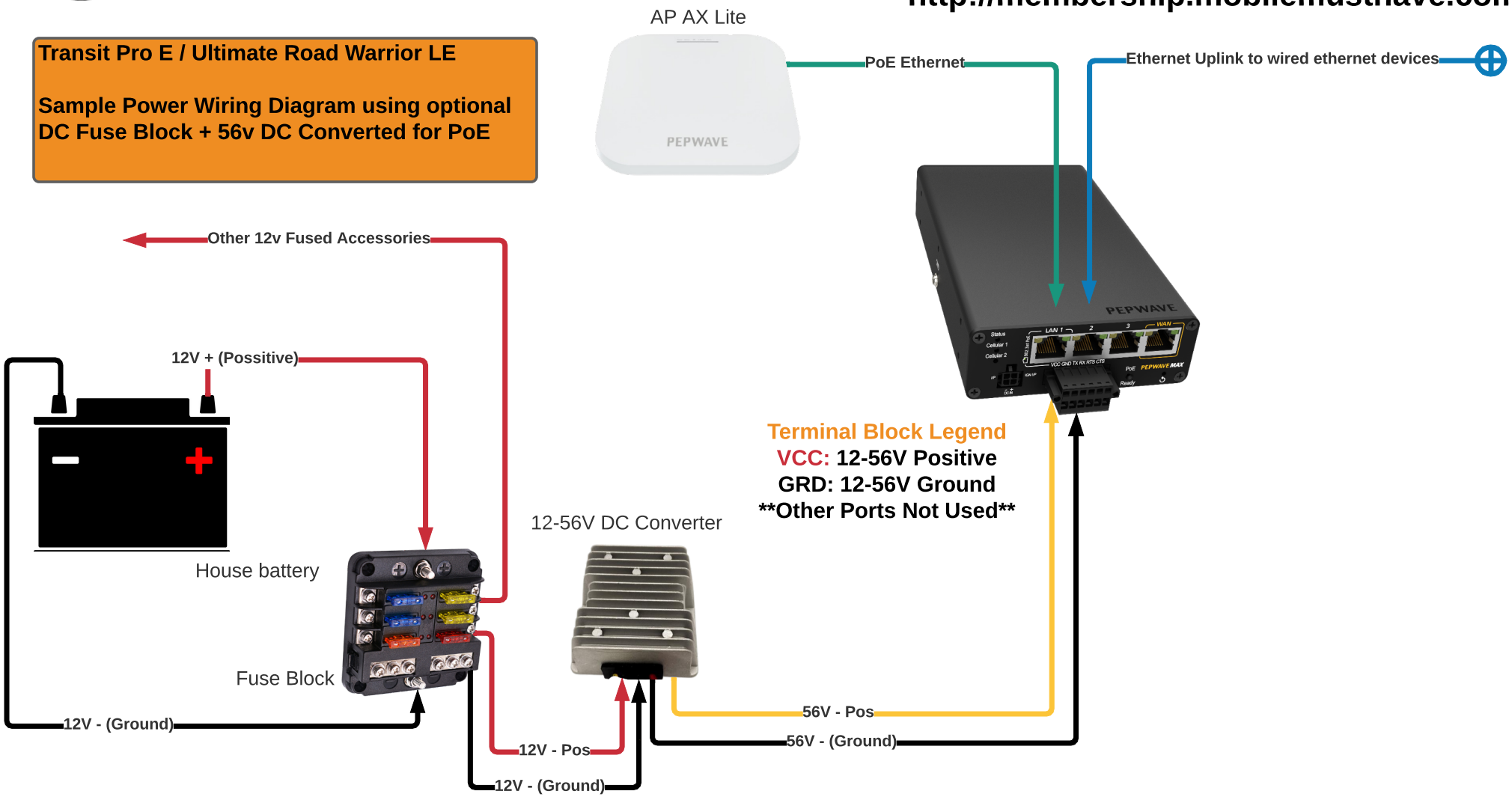

Warning:

Provided for informational purposes only. Always consult a certified electrician or installer if you are unsure of how to wire electrical systems.

Copywright 2022 Entergy Group, LLC DBA MobileMustHave.com - DO NOT DUPLICATE OR DISTRIBUTE WITHOUT WRITTEN AUTHORIZATION